DATASHEET

OLS-330 EB525

Green LED with Epoxy Lens

Features:

- Footprint: 3216 (1206)
- Epoxy lens with 30° view angle
- Size: 3.2(L) x 1.6(W) x 1.6(H) mm
- Circuit substrate: Glass Laminated Epoxy
- ROHS and REACH compliant
- Lead-free solderable
- All devices sorted into intensity classes
- Taped in 8 mm blister tape
- Taping: face-up (T)

Applications:

- Sensing
- Illumination

Copyright © 2025 EPIGAP OSA Photonics GmbH. All Rights Reserved

Typical Electro-Optical Characteristics

Measurement conditions $T_{ambient}$ = 23 °C; t_{test} ≤ 60 ms

Parameter	Symbol	Condition	Min	Typ	Max	Unit
Emitting Color				Green		
Forward Voltage	V_f	I_f = 20 mA	-	3	3.6	V
Peak Wavelength	λ_p	I_f = 20 mA		525		nm
Dominant Wavelength	λ_d	I_f = 20 mA	520		530	nm
FWHM	$\Delta\lambda$	I_f = 20 mA		29		nm
Radiant Intensity	I_e	I_f = 20 mA		12		mW/sr
Radiant Power	Φ_e	I_f = 20 mA		7		mW
Luminous intensity	I_v	I_f = 20 mA	2500	5000		mcd
View Angle	θ	I_f = 20 mA		30		deg.
Reverse Current	I_R	V_R = 5 V			10	µA

Maximum Ratings

Parameter		Symbol	Min	Max	Unit
Forward Current		$I_{f, max}$		30	mA
Forward Current, pulsed	f = 1kHz, τ=1:8	$I_{f, pulse}$		125	mA
Reverse Voltage		V_R		5	V
Power dissipation		Pd		110	mW
Thermal Resistance Junction – Solder point		R_{th_JS}		450	K/W
Operating Temperature		T_{op}	-40	+85	°C
Storage Temperature		T_{St}	-40	+85	°C

Electrostatic discharge classification (MIL-STD-883): Class 1

Copyright © 2025 EPIGAP OSA Photonics GmbH. All Rights Reserved

Typical Performance

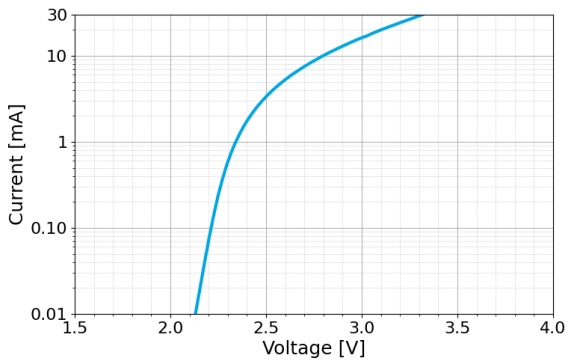

Forward Current vs. Forward Voltage

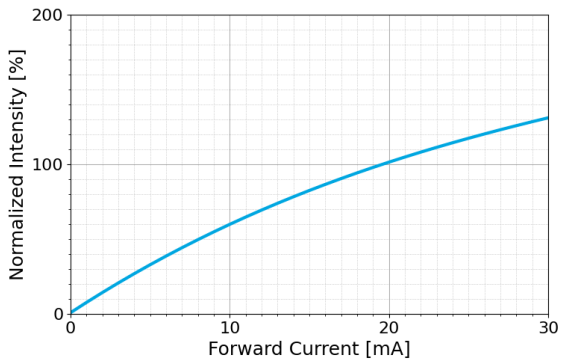

Relative Intensity vs. Forward Current

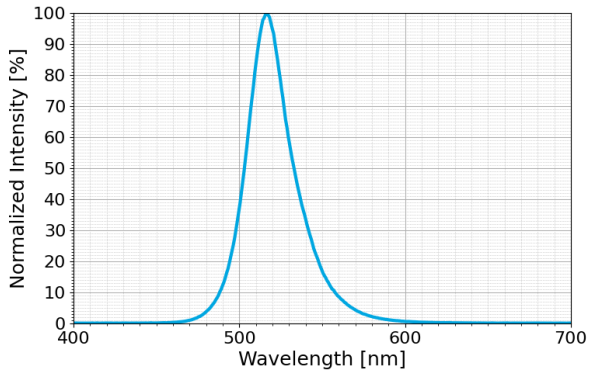

Optical Spectrum

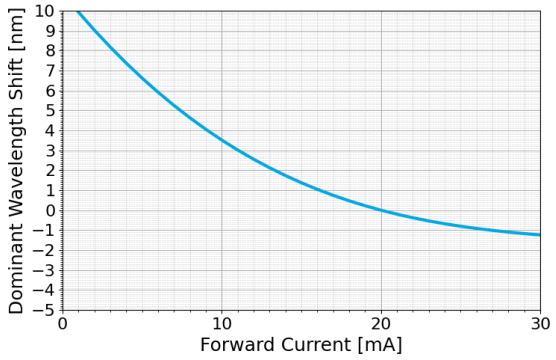

Wavelength Shift vs. Forward Current

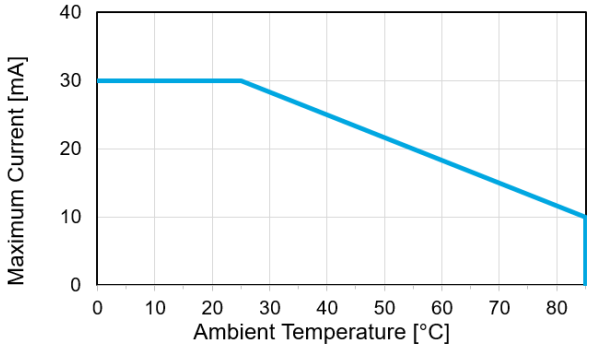

Maximum Ratings (1)

(1) Assuming connection to an infinite heatsink

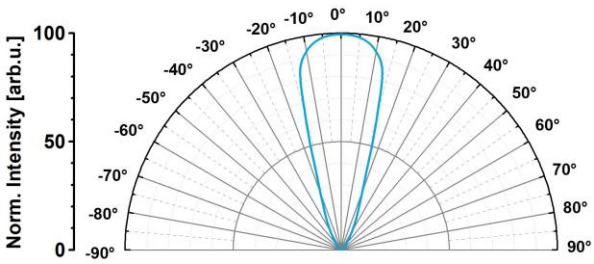

Radiation Pattern

Copyright © 2025 EPIGAP OSA Photonics GmbH. All Rights Reserved

Outline Drawing

Unless otherwise specified, all drawing units are in mm
Tolerances are: ISO 2768-m

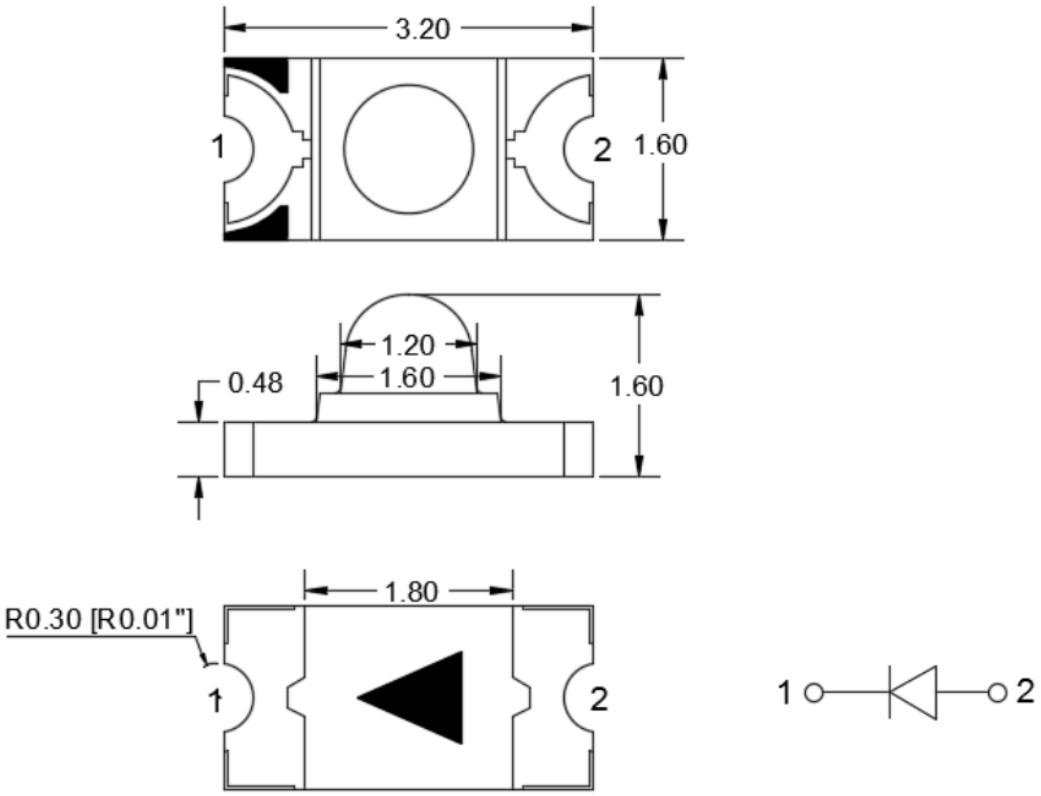

Marking at the cathode side.

Recommended soldering pad

Unless otherwise specified, all drawing units are in mm unless specified otherwise

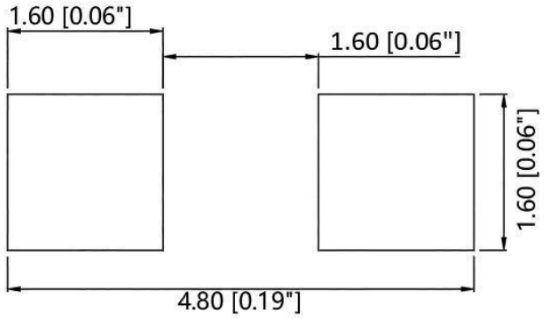

Copyright © 2025 EPIGAP OSA Photonics GmbH. All Rights Reserved

Soldering Profile

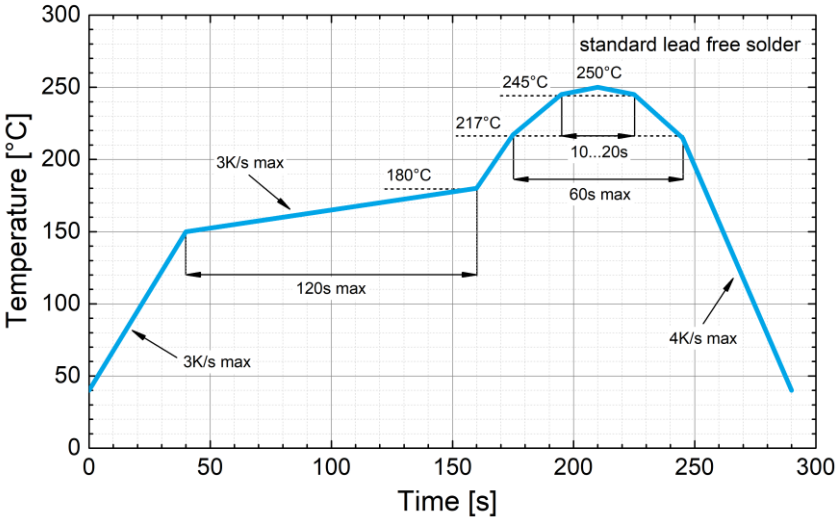

Recommended soldering profile for lead free soldering

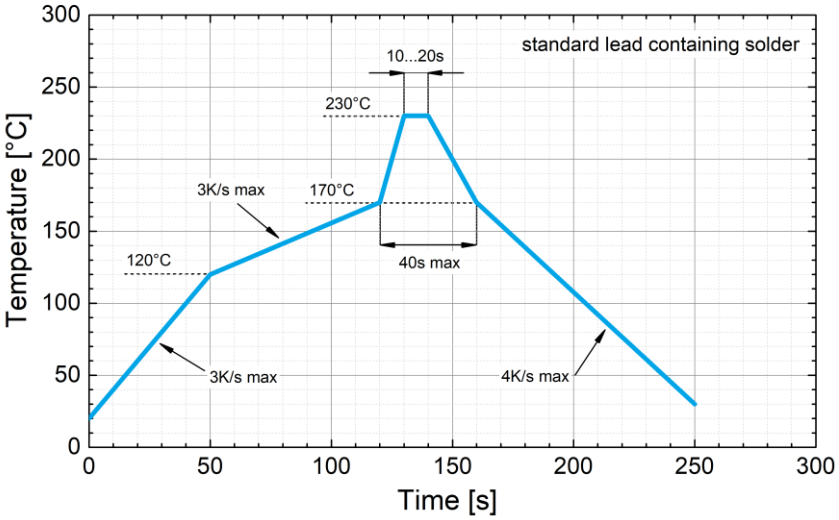

Recommended soldering profile for solder containing lead

Manual Soldering: Maximum soldering iron power, temperature and time 25 W / 300 °C for 3 s.

Copyright © 2025 EPIGAP OSA Photonics GmbH. All Rights Reserved

Tape And Reel Packaging

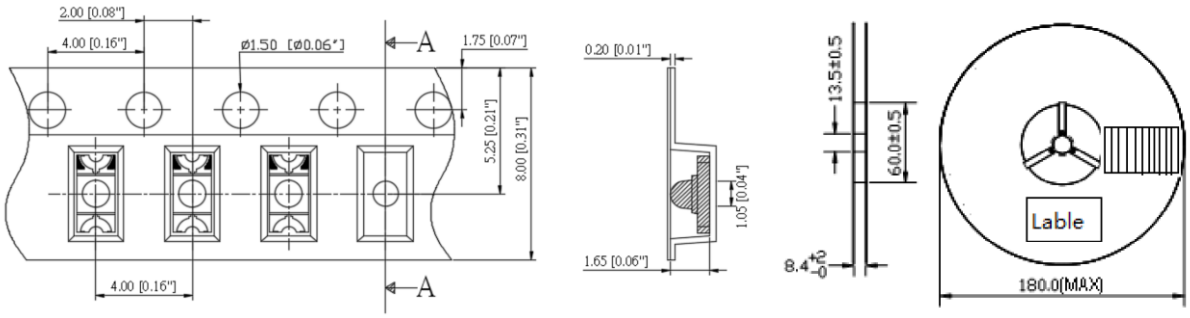

D	Parts/reel
7″	2000

Packaging

The reel is sealed in a special plastic bag with integrated ESD protection including a silica dry-pack. Shelf life for sealed bag: 12 months on max. 30 °C and 60% Rh.
Floor life: 12 months under max. 30 °C and 60% Rh in a dust free environment.
Other bags (i.e. MBB, HIC, Vacuum pack, etc.) available on request.

Copyright © 2025 EPIGAP OSA Photonics GmbH. All Rights Reserved

Notice

The information describes the type of component and shall not consider as assured characteristics. Terms of delivery and rights to change reserved. The data sheet may change without prior notification; the only valid issue and current revision can be on our website. Due to technical requirements, components may contain dangerous substances.
It is the responsibility of the customer to evaluate and ensure that the use of the products in their specific applications complies with relevant safety standards and regulations. Customers must assess the exposure conditions within their systems and ensure that appropriate measures are taken to prevent exceeding the permissible exposure limits outlined in IEC 62471. EPIGAP OSA Photonics GmbH does not assume liability for any non-compliance arising from the integration or usage of LEDs in customer systems.
Parameters can vary in different applications. The customer must validate all operating parameters for each application. EPIGAP OSA Photonics GmbH does not have the responsibility for the reliability and the degradation behavior of products made with EPIGAP OSA Photonics GmbH diodes as they depend not only on the product itself but also on the operation, manufacturing or design of the final products. The customer is responsible to ensure the long-term stability of the product according to their requirements. If components are used in toys or, life support systems, EPIGAP OSA Photonics GmbH must expressly authorize the use of the components prior to incorporating them into the customer's systems!
Packaging: EPIGAP OSA Photonics GmbH uses recyclable packages.

EPIGAP OSA Photonics GmbH

www.epigap-osa.de

Köpenicker Str.325
12555 Berlin Germany
Tel. +49 (0)30 6576 3764
sales@epigap-osa.de

Copyright © 2025 EPIGAP OSA Photonics GmbH. All Rights Reserved